2.3.20

Figures for Lemma on page 6 of Lecture Note 11

Action of reflection about M_1 followed by reflection about M_2.

M_1, M_2 : mirror lines

θ : angle between them

FIGURE 1

(when $\gamma < \theta$)

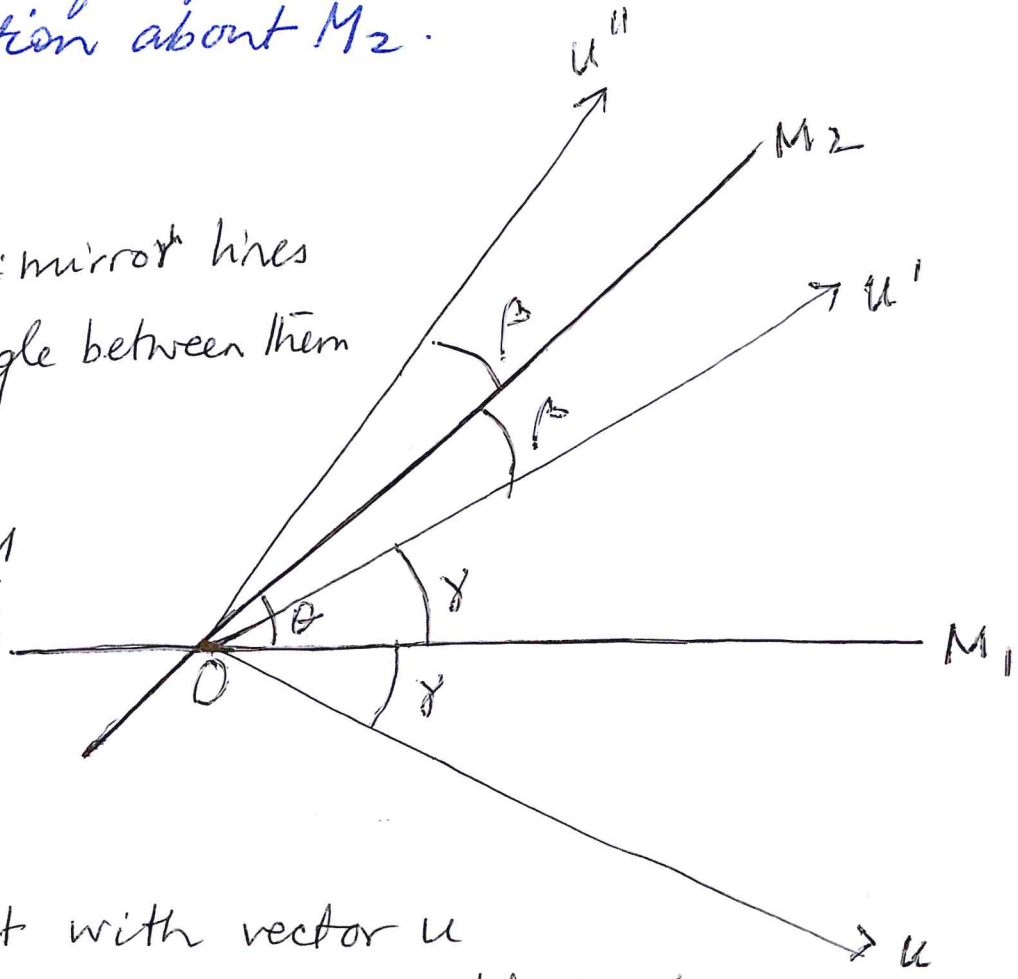

- Start with vector u
- reflect about M_1 to obtain u'
- then reflect u' about M_2 to get u''

Angle between u'' and $u' = 2\gamma + 2\beta = 2\theta$

FIGURE 2

(when $\gamma > \theta$)

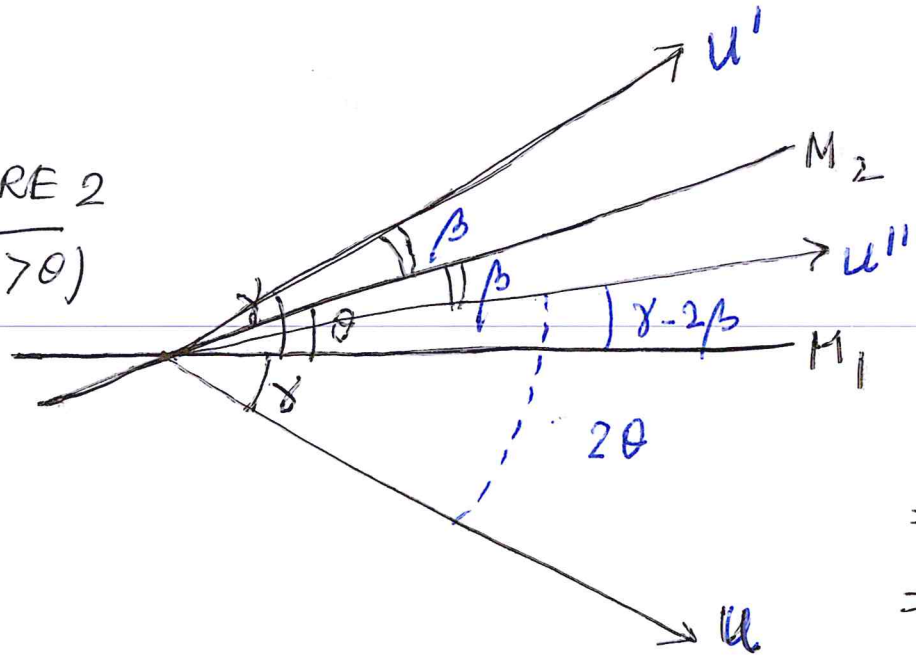

Angle between u'' & u'

$= \gamma + \gamma - 2\beta$

$= 2(\gamma - \beta) = 2\theta$